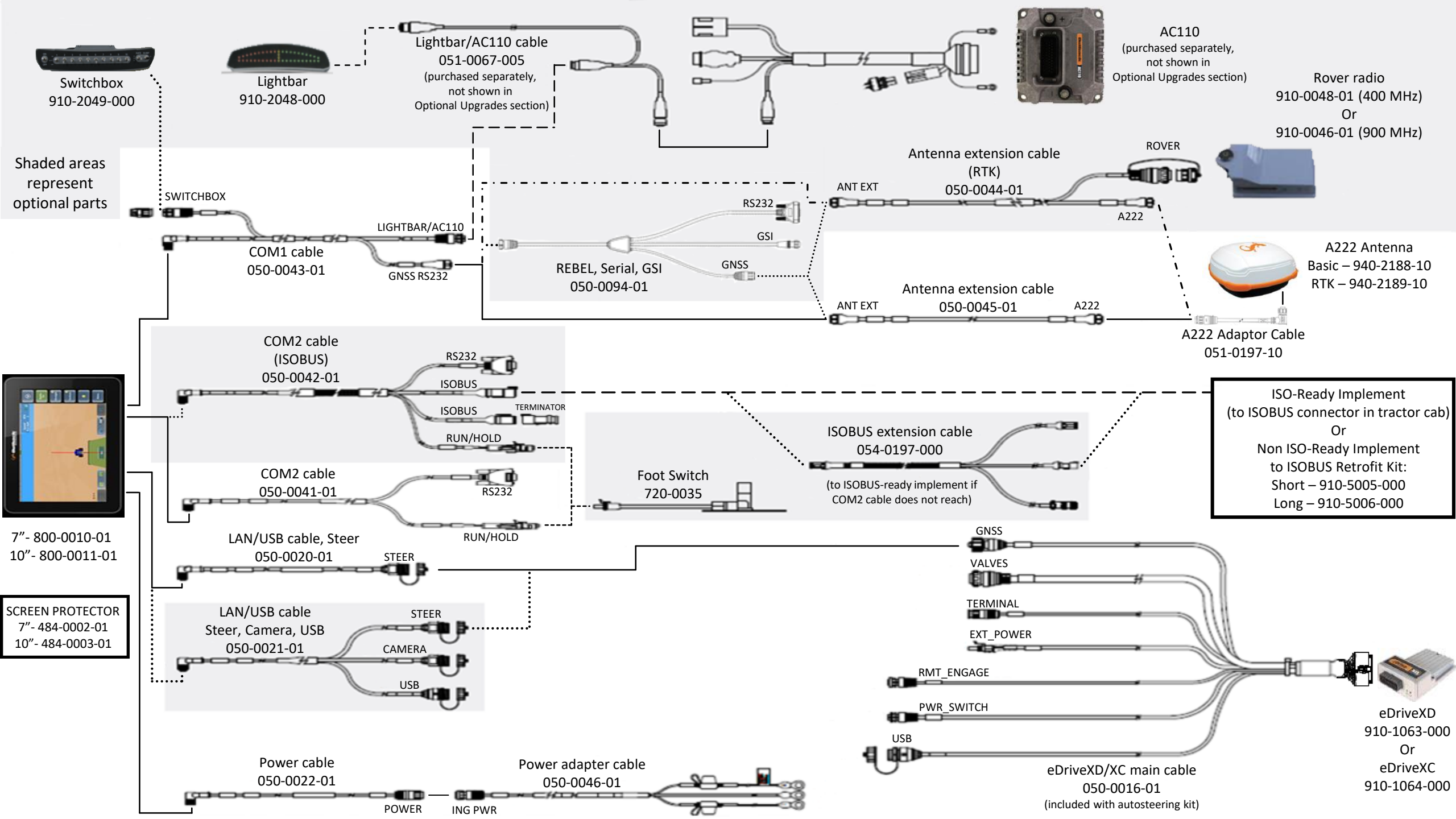
Switchbox
910-2049-000
Lightbar
910-2048-000
Lightbar/AC110 cable
051-0067-005
(purchased separately, not shown in Optional Upgrades section)
AC110
(purchased separately, not shown in Optional Upgrades section)
Rover radio
910-0048-01 (400 MHz)
Or
910-0046-01 (900 MHz)
Shaded areas represent optional parts
SWITCHBOX
LIGHTBAR/AC110
COM1 cable
050-0043-01
GNSS RS232
RS232
GSI
GNSS
REBEL, Serial, GSI
050-0094-01
ANT EXT
Antenna extension cable
(RTK)
050-0044-01
ROVER
A222
A222 Antenna
Basic – 940-2188-10
RTK – 940-2189-10
Antenna extension cable
050-0045-01
ANT EXT
A222
A222 Adaptor Cable
051-0197-10
COM2 cable
(ISOBUS)
050-0042-01
RS232
ISOBUS
ISOBUS
TERMINATOR
RUN/HOLD
COM2 cable
050-0041-01
RS232
RUN/HOLD
Foot Switch
720-0035
ISOBUS extension cable
054-0197-000
(to ISOBUS-ready implement if COM2 cable does not reach)
ISO-Ready Implement
(to ISOBUS connector in tractor cab)
Or
Non ISO-Ready Implement
to ISOBUS Retrofit Kit:
Short – 910-5005-000
Long – 910-5006-000
7”- 800-0010-01
10”- 800-0011-01
SCREEN PROTECTOR
7”- 484-0002-01
10”- 484-0003-01
LAN/USB cable, Steer
050-0020-01
STEER
LAN/USB cable
Steer, Camera, USB
050-0021-01
STEER
CAMERA
USB
GNSS
VALVES
TERMINAL
EXT_POWER
RMT_ENGAGE
PWR_SWITCH
USB
eDriveXD/XC main cable
050-0016-01
(included with autosteering kit)
eDriveXD
910-1063-000
Or
eDriveXC
910-1064-000
Power cable
050-0022-01
POWER
Power adapter cable
050-0046-01
ING PWR